© Martin Peters Associates

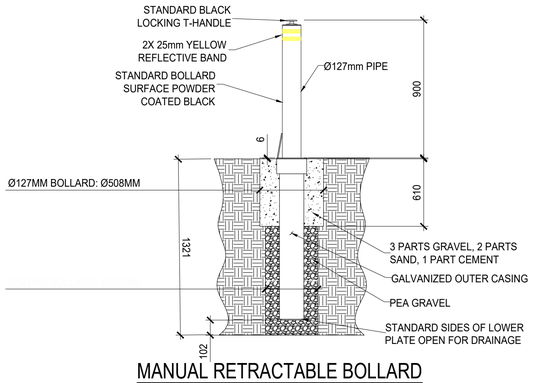

MANUAL RETRACTABLE BOLLARD DETAIL

SCALE 1:20 @ A1 & 1:40 @ A3

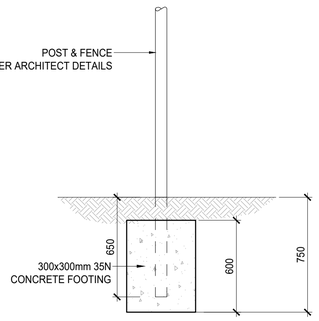

TYPICAL FENCE FOUNDATION DETAIL

SCALE 1:20 @ A1 & 1:40 @ A3

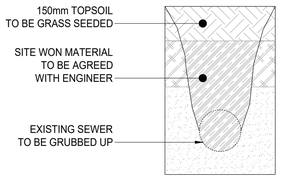

TYPICAL GRUBBING DETAIL TO EXISTING DRAINAGE

SCALE 1:20 @ A1 & 1:40 @ A3

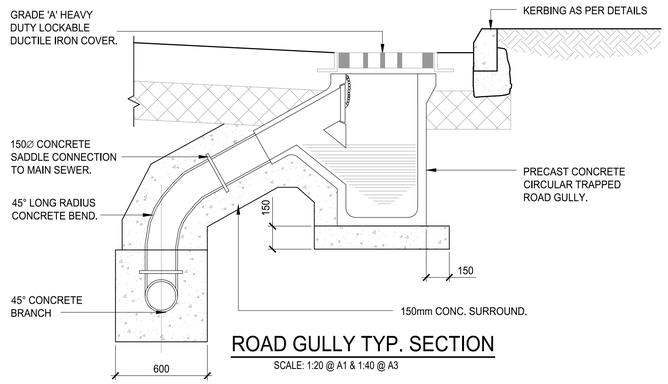

ROAD GULLY TYP. SECTION

SCALE: 1:20 @ A1 & 1:40 @ A3

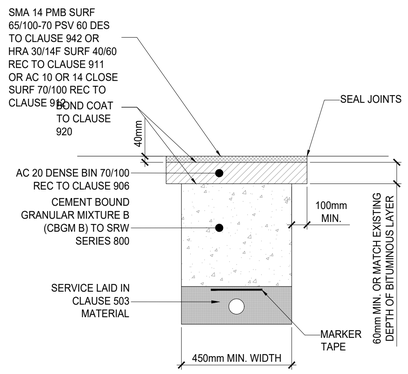

TYPICAL ROAD REINSTATEMENT

SCALE 1:20 @ A1 & 1:40 @ A3

CARPARK DETAIL

30mm of SMA (STONE MASTIC ASPHALT) 10 SURFACE COURSE ON
50mm of AC (ASPHALT CONCRETE) 20 DENSE BINDER COURSE ON
150mm CLAUSE 804 SUB-BASE AS PER TII DMRB SPECIFICATION ON
150mm FOR CBR > 5% OF CLAUSE 6F2 CAPPING LAYER OR
300mm FOR CBR< 5% OF CLAUSE 6F2 CAPPING LAYER

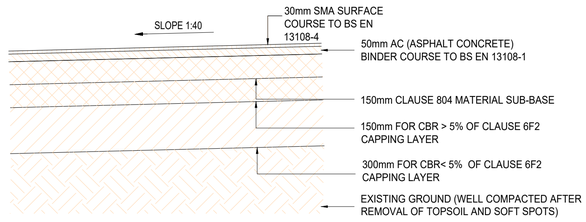

PROPOSED 'CAR' CARPARK DETAIL

SCALE 1:20 @ A1 & 1:40 @ A3

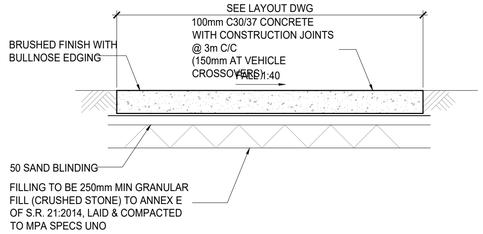

TYPICAL SECTION THROUGH CONCRETE FOOTPATH

SCALE: 1:20 @ A1 & 1:40 @ A3

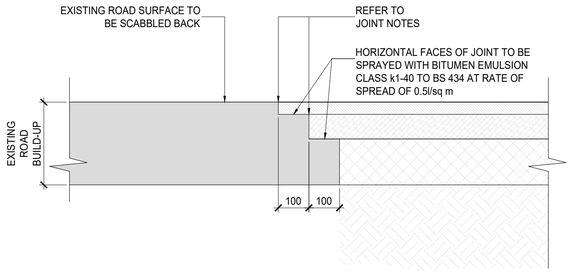

JOINT DETAIL

SCALE 1:10 @ A1 & 1:20 @ A3

JOINT NOTES: -

1. FORM 2 NO. SAW CUTS TO BE CUT THROUGH THE FULL DEPTH OF LAYER TO BE TIED IN AT A MIN. OF 100mm & 200mm FROM SIDES OF EXCAVATION PRIOR TO PERMANENT REINSTATEMENT.

2. 100 °C HOT BITUMEN BINDER 50 PEN OR COLD THIXOTROPIC BITUMEN 50 - 70 PEN TO BE APPLIED TO ALL VERTICAL CUTS TO ACHIEVE 2mm THICKNESS IN ACCORDANCE WITH B.S. 594 PRIOR TO APPLICATION OF BITUMINOUS MATERIALS.

3. ANY DAMAGED AREA ADJACENT TO THE OPENING AND RESULTING FROM THE EXCAVATION OPERATION SHALL BE INCLUDED WITHIN THE AREA TO BE REINSTATED.

4. THE COARSE AGGREGATE IN THE WEARING COURSE SHALL HAVE A POLISHED STONE VALUE OF NOT LESS THAN 60.

ALL WORKS TO BE IN ACCORDANCE WITH THE TII SPECIFICATION FOR ROAD WORKS.

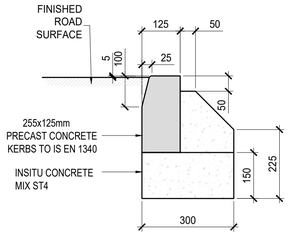

PROPOSED DISHED KERB DETAIL

SCALE 1:10 @ A1 & 1:20 @ A3

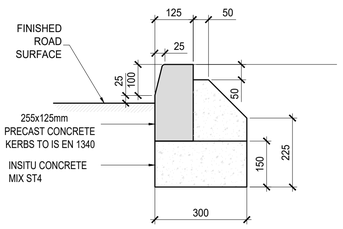

PROPOSED KERB DETAIL

SCALE 1:10 @ A1 & 1:20 @ A3

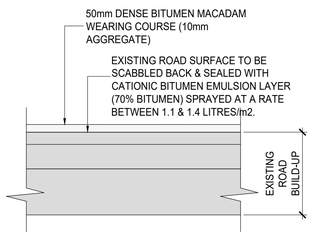

TARMAC OVERLAYING DETAIL

SCALE 1:10 @ A1 & 1:20 @ A3

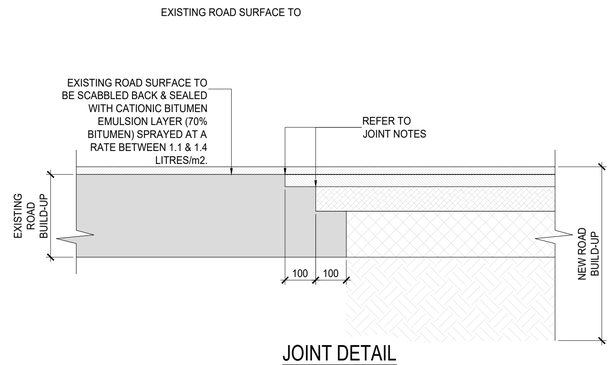

JOINT DETAIL

SCALE 1:10 @ A1 & 1:20 @ A3

JOINT NOTES: -

1. FORM 2 NO. SAW CUTS TO BE CUT THROUGH THE FULL DEPTH OF LAYER TO BE TIED IN AT A MIN. OF 100mm & 200mm FROM SIDES OF EXCAVATION PRIOR TO PERMANENT REINSTATEMENT.

2. 100 °C HOT BITUMEN BINDER 50 PEN OR COLD THIXOTROPIC BITUMEN 50 - 70 PEN TO BE APPLIED TO ALL VERTICAL CUTS TO ACHIEVE 2mm THICKNESS IN ACCORDANCE WITH B.S. 594 PRIOR TO APPLICATION OF BITUMINOUS MATERIALS.

3. ANY DAMAGED AREA ADJACENT TO THE OPENING AND RESULTING FROM THE EXCAVATION OPERATION SHALL BE INCLUDED WITHIN THE AREA TO BE REINSTATED.

4. THE COARSE AGGREGATE IN THE WEARING COURSE SHALL HAVE A POLISHED STONE VALUE OF NOT LESS THAN 60.

ALL WORKS TO BE IN ACCORDANCE WITH THE TII SPECIFICATION FOR ROAD WORKS.

Issue Register

No.	Date	Description	Drawn	Checked	Approved
00	20/10/26	P8 - TENDER ISSUE	NT	EJQ	EJQ

GENERAL NOTES:-

1. THIS DRAWING TO BE READ IN CONJUNCTION WITH ALL RELEVANT ARCHITECTS & ENGINEERS DRAWINGS & SPECIFICATIONS.
2. DO NOT SCALE. USE FIGURED DIMENSIONS ONLY.
3. THE CONTRACTOR SHALL VERIFY ALL DIMENSIONS & ELEVATIONS WITH ARCHITECTURAL DRAWINGS PRIOR TO START OF CONSTRUCTION. ALL DISCREPANCIES TO BE NOTIFIED, IN WRITING TO ENGINEERS & ARCHITECTS FOR RESOLUTION.
4. ALL DIMENSIONS ON DRAWINGS ARE IN MILLIMETRES UNLESS OTHERWISE NOTED.
5. FOR DETAILS AND SETTING OUT OF RWP, SVP, WVP & ALL OPENINGS SEE THE RELEVANT ARCHITECTS DRAWINGS.
6. FOR RADON BARRIER, D.P.C. & INSULATION DETAILS REFER TO ARCHITECTS DRAWINGS.

ALL SETTING OUT DIMENSIONS TO BE CHECKED AGAINST ARCHITECTS DRAWINGS. ARCHITECTS DRAWINGS TO TAKE PRECEDENCE.

DRAWING NOTES:-

REFER TO NOTES TEMPLATE

ABBREVIATIONS:-

BTM	BOTTOM
C/C	CENTRE TO CENTRE
CTRS	CENTRES
SFL	STRUCTURAL FLOOR LEVEL
FFL	FINISHED FLOOR LEVEL
TOC	TOP OF CONCRETE
TP	TOP
TOS	TOP OF STEEL
UNO	UNLESS NOTED OTHERWISE

GENERAL LEGEND:-

	DENOTES SITE BOUNDARY
	DENOTES LAND OWNERSHIP BOUNDARY
	DENOTES EXISTING BUILDING
	DENOTES PROPOSED BUILDING
0.000m	DENOTES EXISTING GROUND LEVEL
+1.000m	DENOTES PROPOSED GROUND LEVEL
FFL+0.000m	DENOTES EXISTING FINISH FLOOR LEVELS
FFL +0.000m	DENOTES PROPOSED FINISHED FLOOR LEVEL

Client: WATERFORD & WEXFORD EDUCATION AND TRAINING BOARD

Project: PROPOSED CARPARK UPGRADES & ALTERATIONS WATERFORD TRAINING CENTRE

Drawing Title: PROPOSED CIVIL DETAILS

Project:	Originator:	Phase:	Element:	Spatial Zone:	Level:	Type:	Role:	Number:
261049	MPA	X	X	X	XXX	DR	CE	300

Drawn:	Checked:	Date:	Scale:	Purpose:	Revision:
NT	EJQ	28/08/26	VARIES	P7 - TENDER	00

Martin Peters Associates
Consulting Engineers
Ormonde Road, Kilkenny, R95 AHX8 | T: +353 56 7702761 | E: info@mpa.ie | W: www.mpa.ie

ISO 9001 QUALITY MANAGEMENT